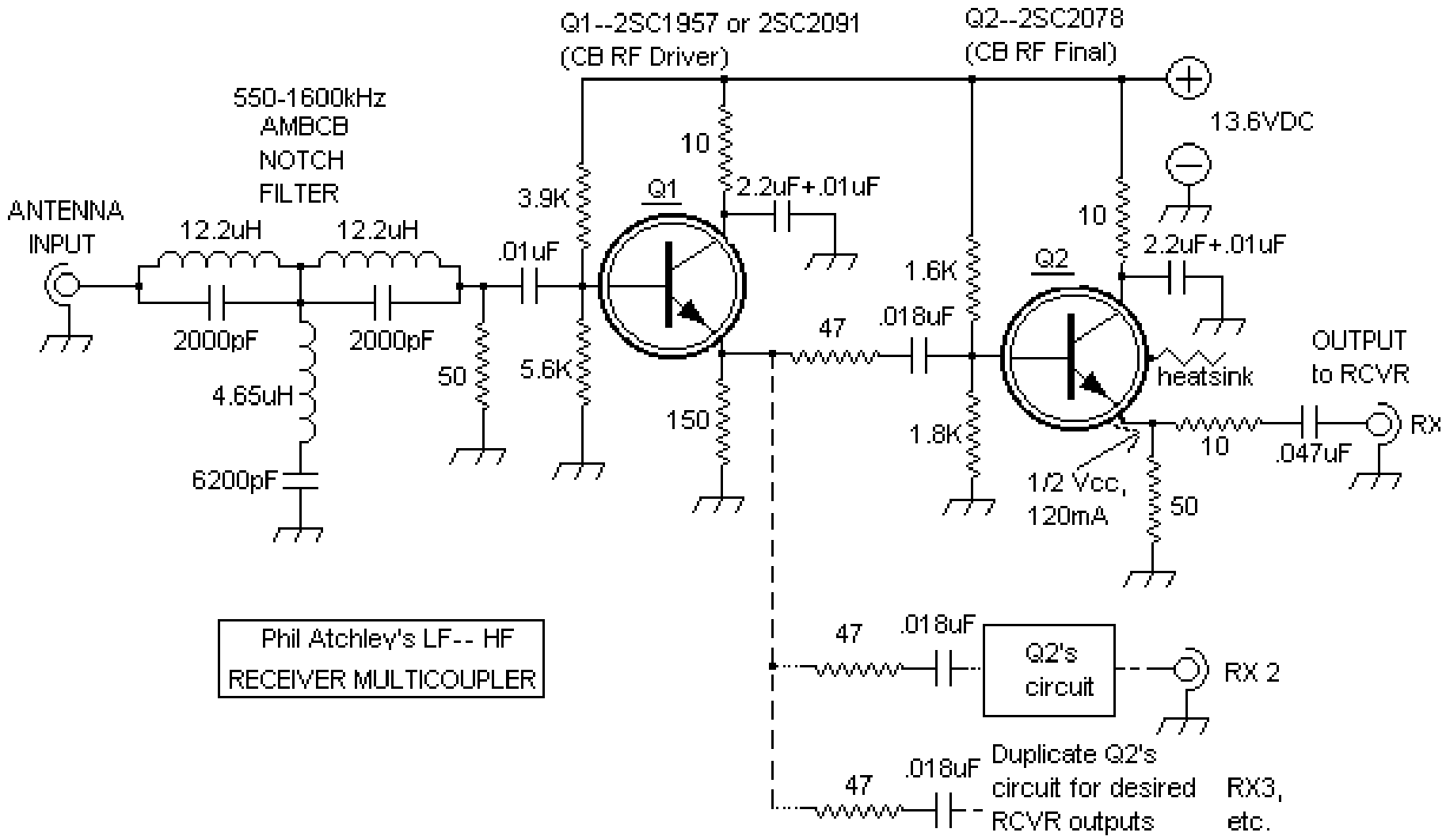
Q1--2SC1957 or 2SC2091
(CB RF Driver)
Q2--2SC2078
(CB RF Final)
13.6VDC
550-1600kHz
AMBCB
NOTCH
FILTER
ANTENNA
INPUT
12.2uH
12.2uH
2000pF
2000pF
4.65uH
6200pF
50
.01uF
3.9K
5.6K
Q1
10
2.2uF+.01uF
150
47
.018uF
1.6K
1.8K
Q2
10
2.2uF+.01uF
heatsink
1/2 Vcc,
120mA
50
10
.047uF
OUTPUT
to RCVR
RX
Phil Atchley's LF-- HF
RECEIVER MULTICOUPLER
47
.018uF
Q2's
circuit
RX 2
47
.018uF
Duplicate Q2's
circuit for desired
RCVR outputs
RX3,
etc.